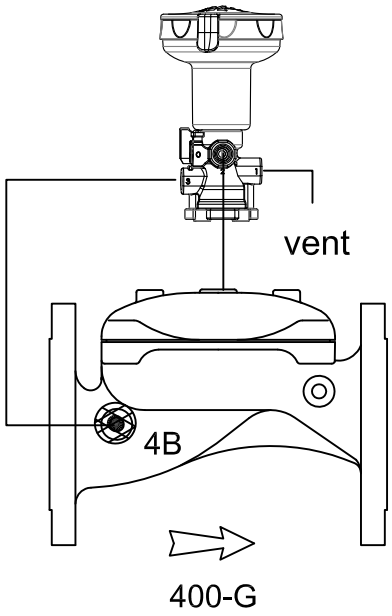

Not to Scale

Bermad Water Technologies
26 Brand Drive , Thomastown , Vic 3074
Ph (03) 9464 2374 Fax (03) 9464 2382

Drawn by :
Date :

Email Address
colin@bermad.com.au

Revision Number / Date

Project : Green app 3 way solenoid valve with bluetooth

Drawing Number :